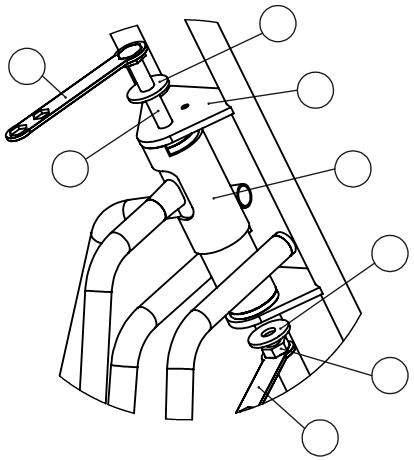

67(3
$WWDFK IURQW SDUW WR UHDU SDUW

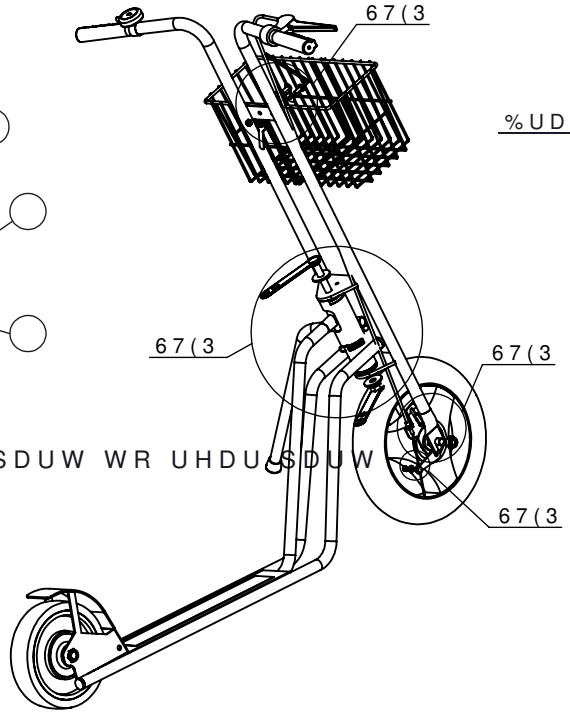

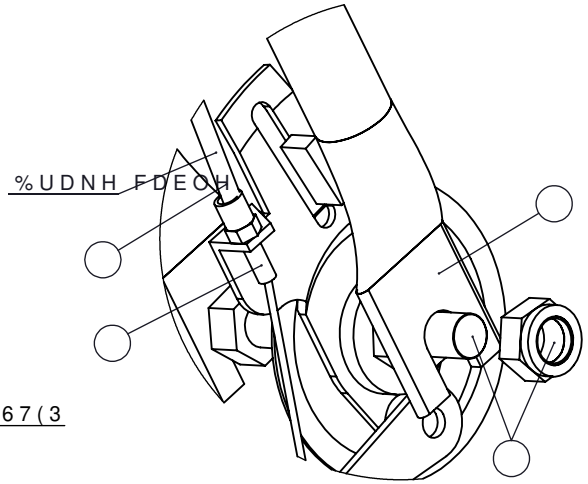

67(3
$WWDFK ZKHHO WR IURQW SDUW

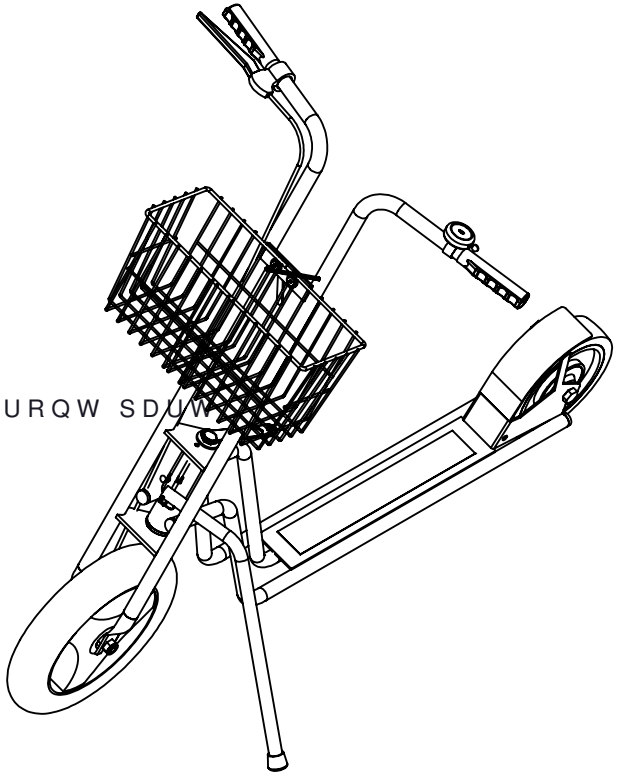

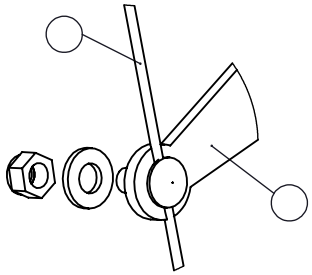

67(3
)L[EUDNH FDEOH ZLWK IURQW ZKHHO

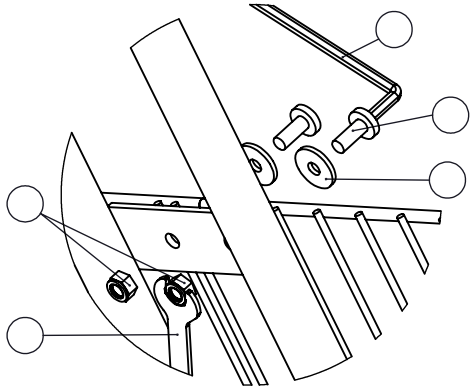

67(3
$WWDFK EDVNHW WR IURQW SDUW

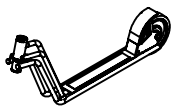		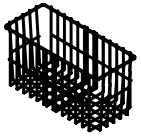	∅	0 [	∅	0	0 [	∅	0	PP PP PP
[	[	[	[	[	[	[	[	[	[	[[[